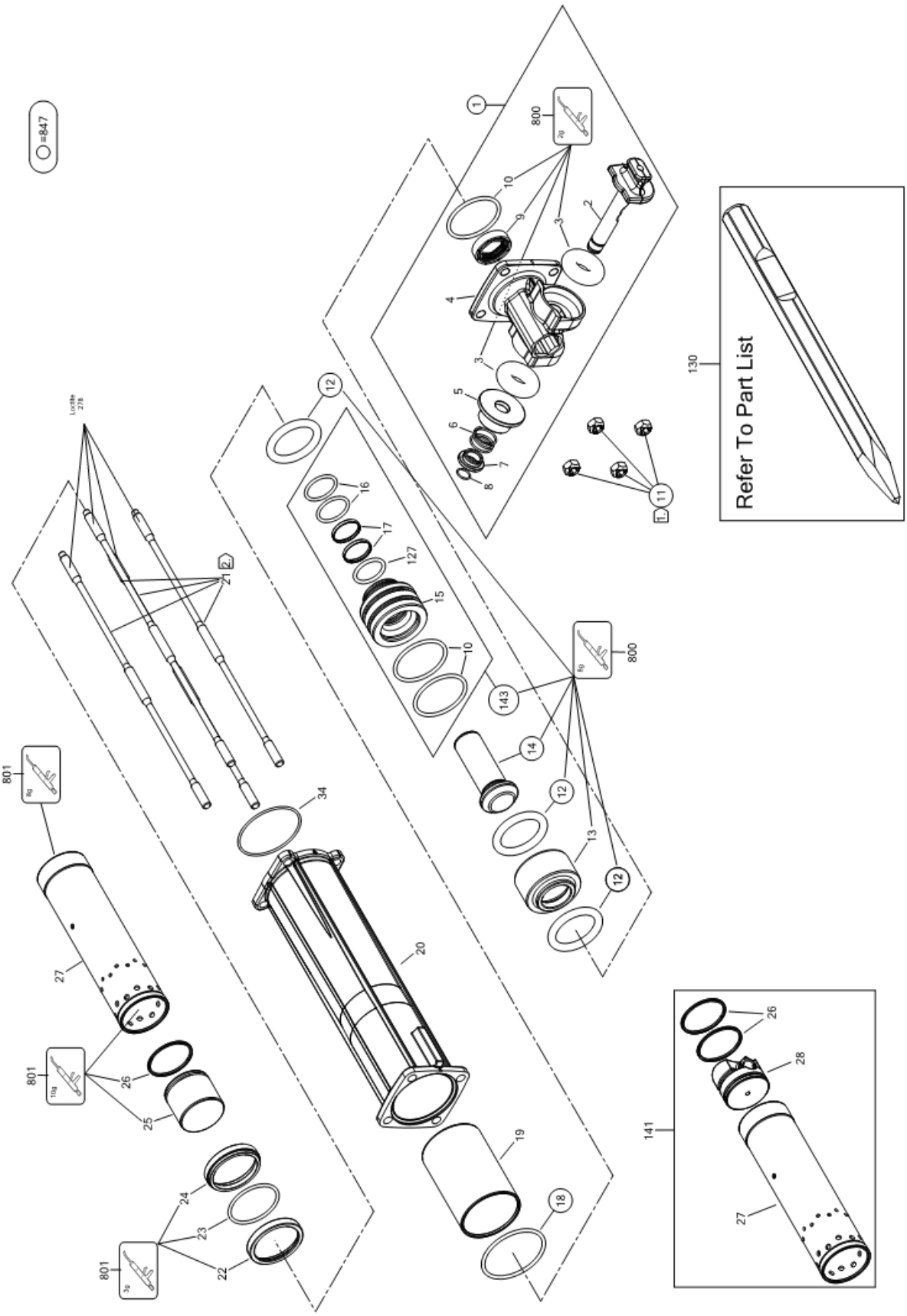D25966 Transmission CIOOC DEMOLITOR 1