3 611 B69 001
Issue / Stand 21-06-21
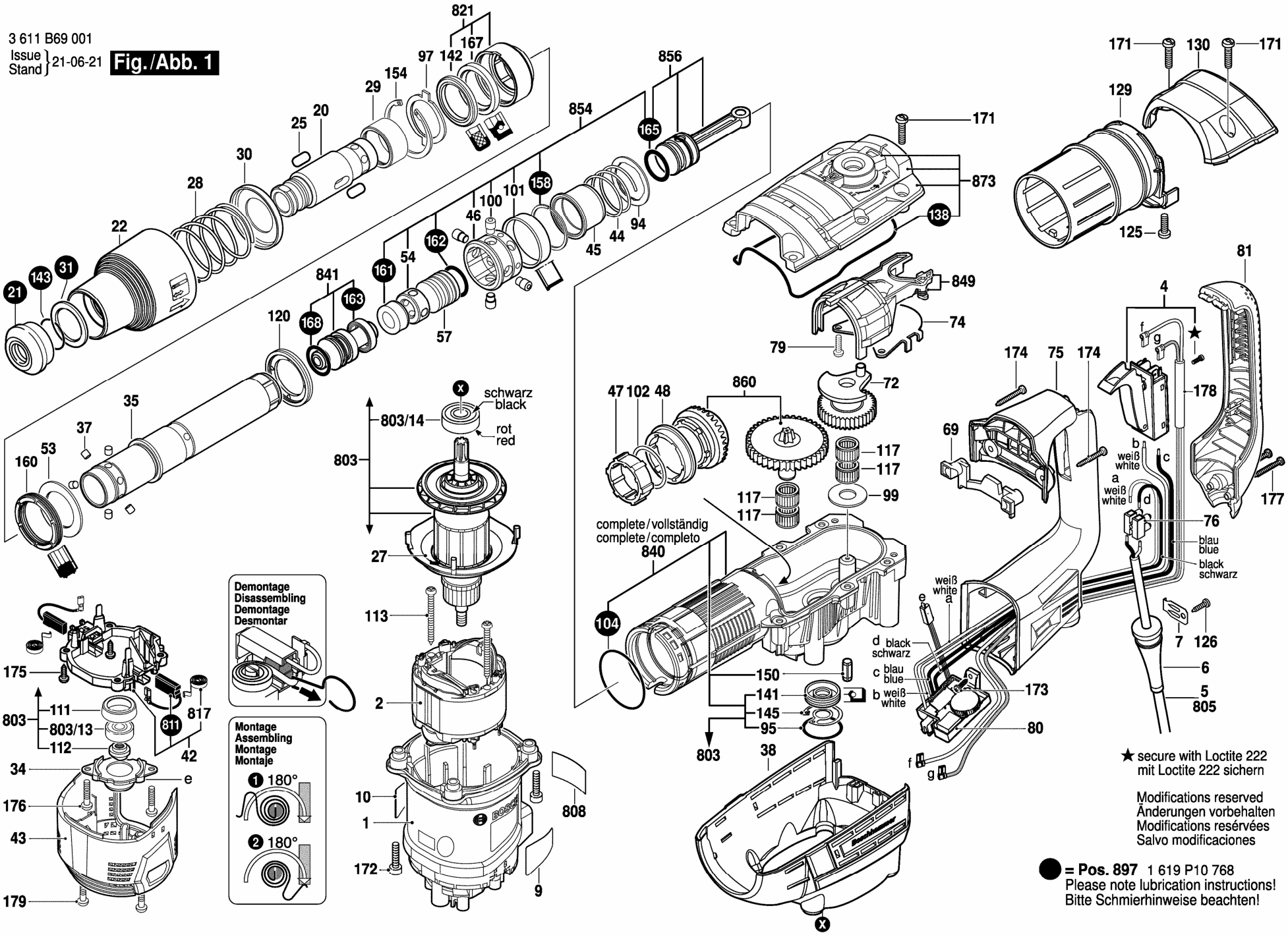
Fig./Abb. 1