3 601 EA4 340
Stand ~~14-12~~
Issue 17-03-23
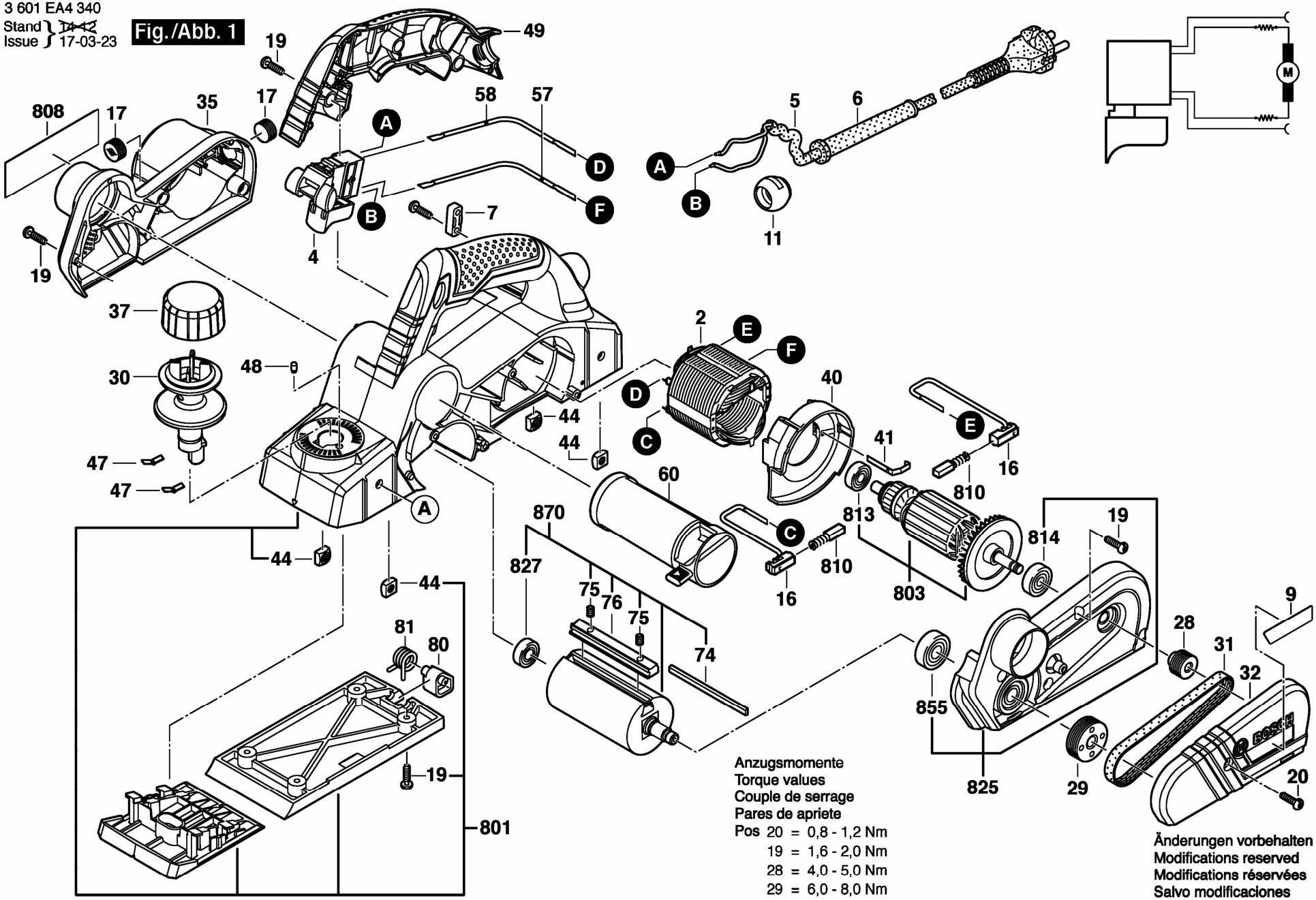
Fig./Abb. 1