3 601 HG0 000

Stand ~~23-04-25~~
Issue 23-07-07

Fig. /Abb. 1

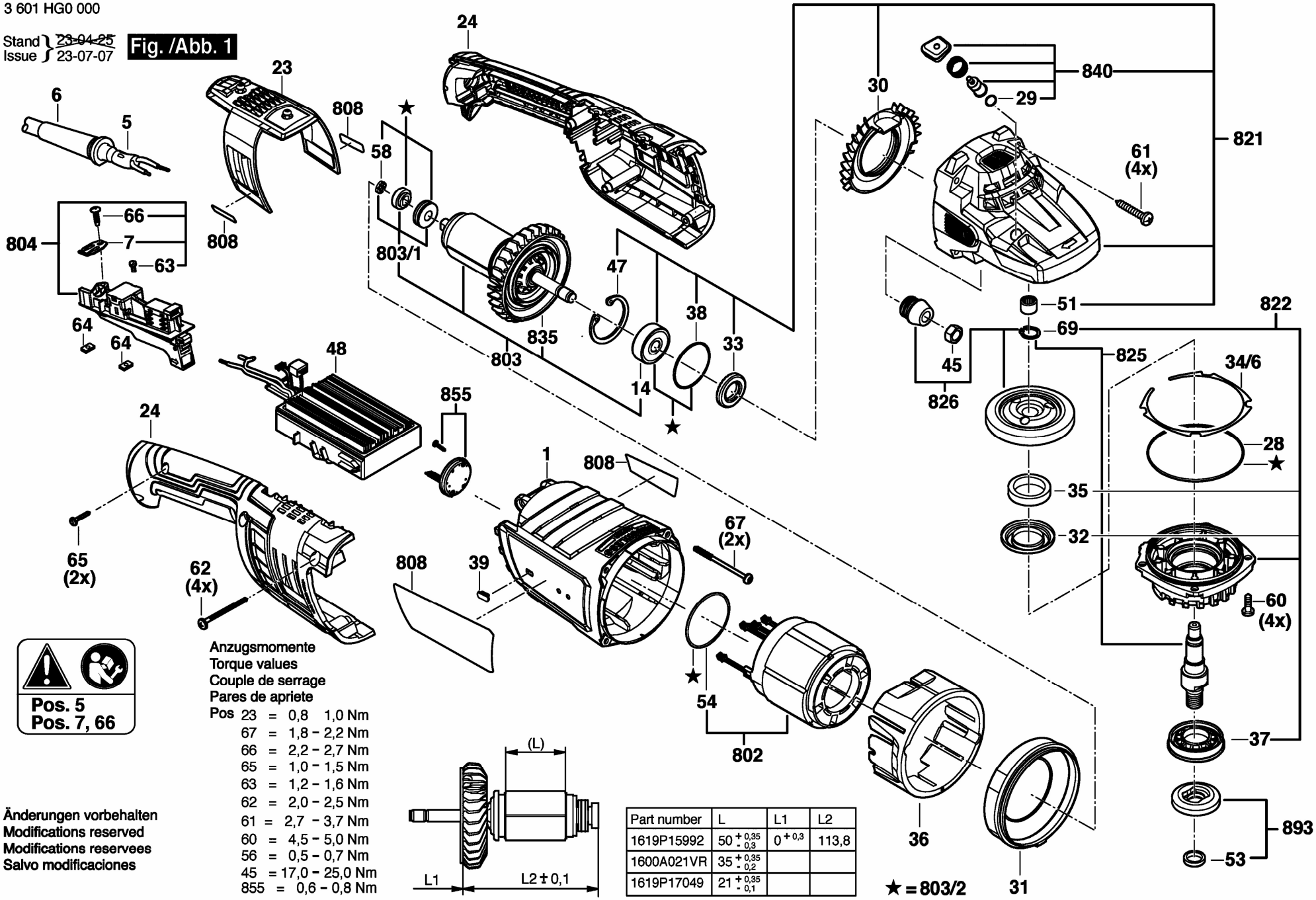

Pos. 5
Pos. 7, 66

Anzugsmomente
Torque values
Couple de serrage
Pares de apriete

Pos 23 = 0,8 1,0 Nm
67 = 1,8 – 2,2 Nm
66 = 2,2 – 2,7 Nm
65 = 1,0 – 1,5 Nm
63 = 1,2 – 1,6 Nm
62 = 2,0 – 2,5 Nm
61 = 2,7 – 3,7 Nm
60 = 4,5 – 5,0 Nm
56 = 0,5 – 0,7 Nm
45 = 17,0 – 25,0 Nm
855 = 0,6 – 0,8 Nm

Part number	L	L1	L2
1619P15992	$50^{+0,35}_{-0,3}$	$0^{+0,3}$	113,8
1600A021VR	$35^{+0,35}_{-0,2}$		
1619P17049	$21^{+0,35}_{-0,1}$		

Änderungen vorbehalten
Modifications reserved
Modifications reservees
Salvo modificaciones