3 603 CA9 301

Issue / Stand 24-04-24
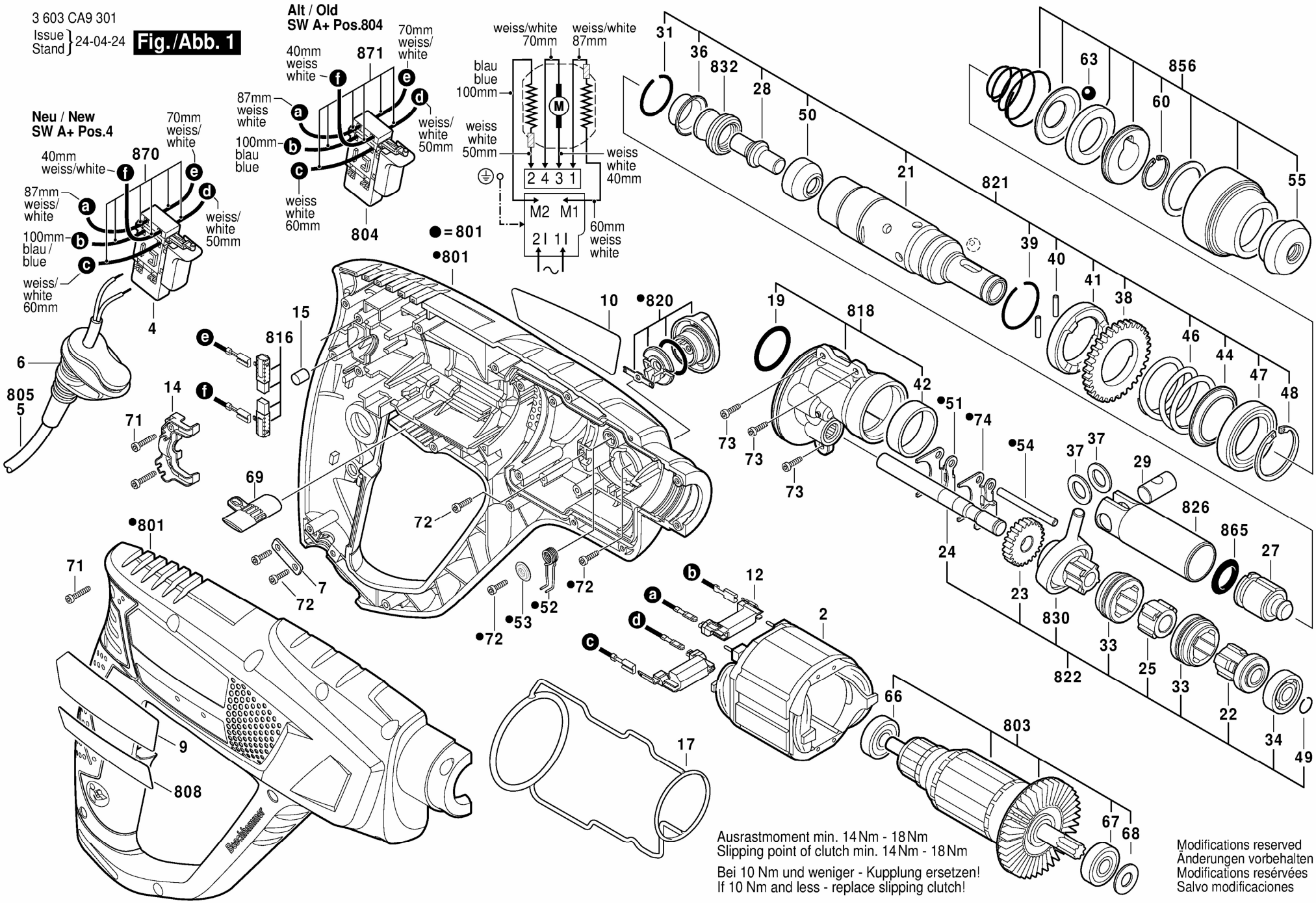
Fig./Abb. 1